JINPAT

Since 1996

High Current Integrated Slip Rings

www.electricalslipring.in

Features

JINPAT High Current Integrated Slip Rings are designed for stable transmission of large current during continuous rotation. The integrated design enables simultaneous transmission of high-power current and signal channels within a compact structure.

Featuring low contact resistance, stable performance, and long service life, the product supports customizable current capacity, circuit conÞguration, rotational speed, operating temperature, and IP protection levels to meet various industrial application requirements.

Selection table

LPA Series Specifications

Series No.	Max IP Grade	Explosion-proof	Outlet Way	Rotor/ Stator Installation Method
Round Series 1	IP68	YES	with/without wire	design by customer's request
Round Series 2	IP68	YES	with wire	/
Round Series 3	IP54/IP51	NO	with/without wire	/
Square Series 1	IP68	YES	with/without wire	/
Square Series 2	IP54	NO	with/without wire	/
Square Series 3	IP68	NO	with wire	/

JINPAT Electronics

Selection table

LPA Round Series

Dimension				Circuits	Rating Current(optional)				Max Rated Voltage	Round Series(optional)		
D1	D2	L1	L2	Optional	60A	100A	130A	/	690V	Series 1	Series 2	Series 3
300	300	according to circuits and other speciPcations		Optional						√	√	√
350	350			Optional	95A	150A	260A	/		√	√	√
450	450			Optional	150A	250A	340A	/		√	√	√
500	500			Optional	220A	370A	500A	/		√	√	√
560	560			Optional	220A	370A	500A	/		√	√	√
720	720			Optional	300A	500A	680A	850A		√	√	√

Round Series 1

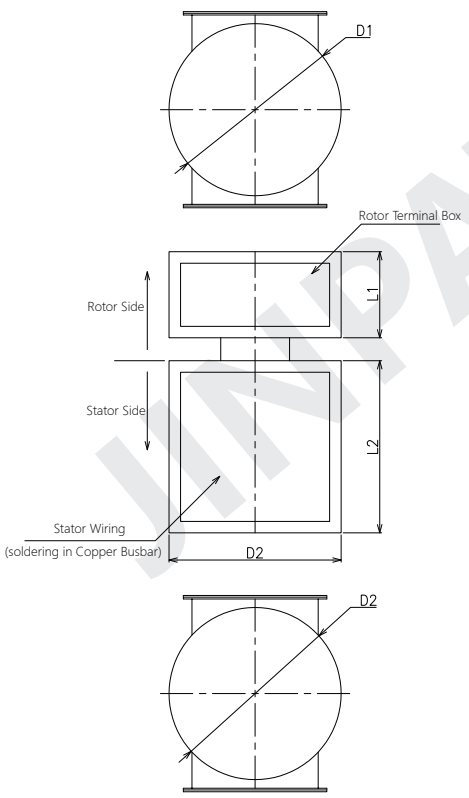

Round Series 2

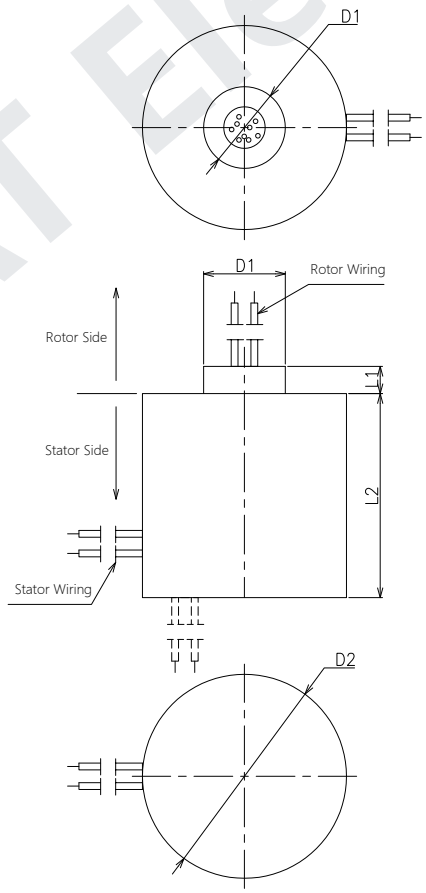

Round Series 3

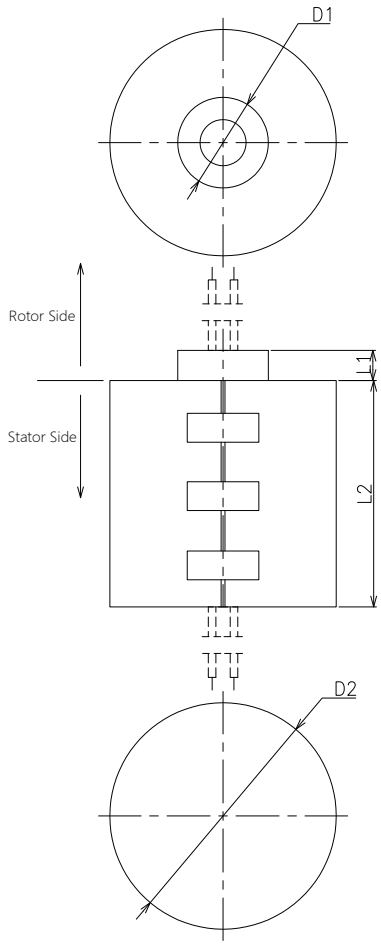

JINPAT Electronics

Selection table

LPA Square Series

Dimension						Circuits	Rating Current(optional)				Max Rated Voltage	Square Series(optional)		
W2	L2	L1/D1	W1	H1	H2	Optional	60A	100A	130A	/	690V	Series 1	Series 2	Series 3
300	300	according to circuits and other speciPcations				Optional						√	√	√
350	350					Optional	95A	150A	260A	/		√	√	√
450	450					Optional	150A	250A	340A	/		√	√	√
500	500					Optional	220A	370A	500A	/		√	√	√
560	560					Optional	220A	370A	500A	/		√	√	√
720	720					Optional	300A	500A	680A	850A		√	√	√

Square Series 1

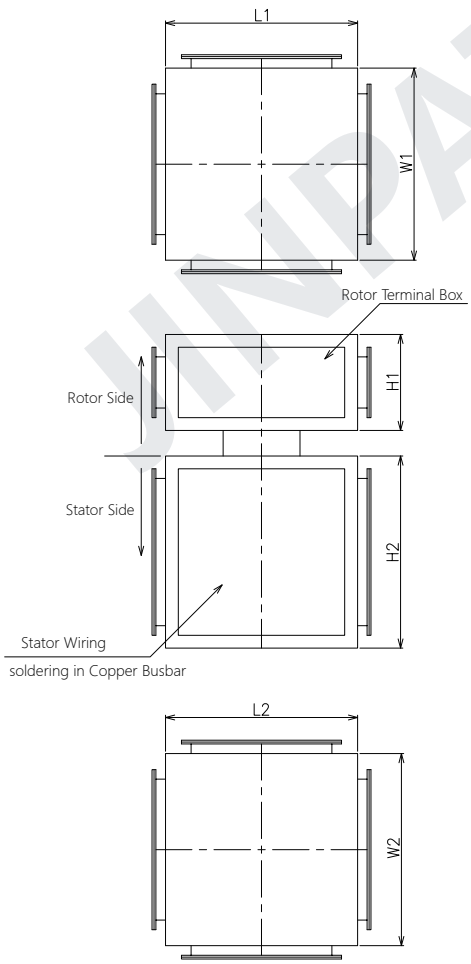

Square Series 2

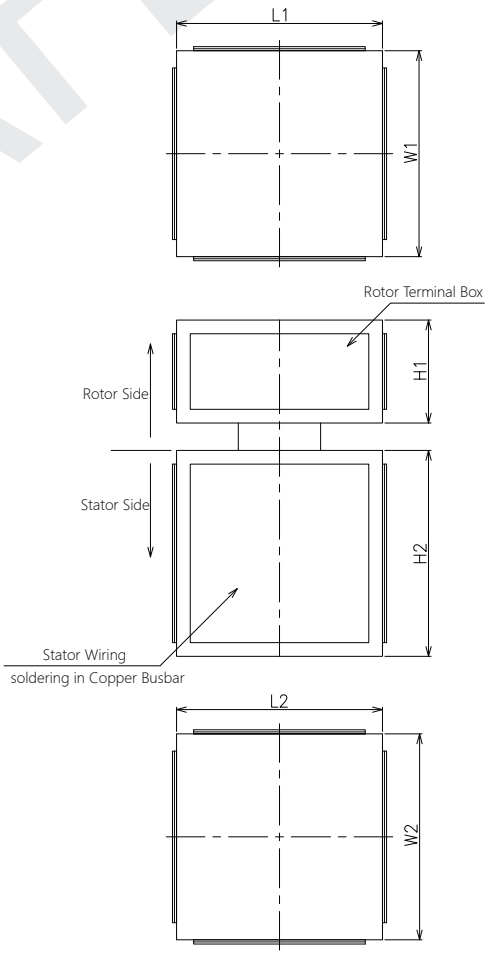

Square Series 3

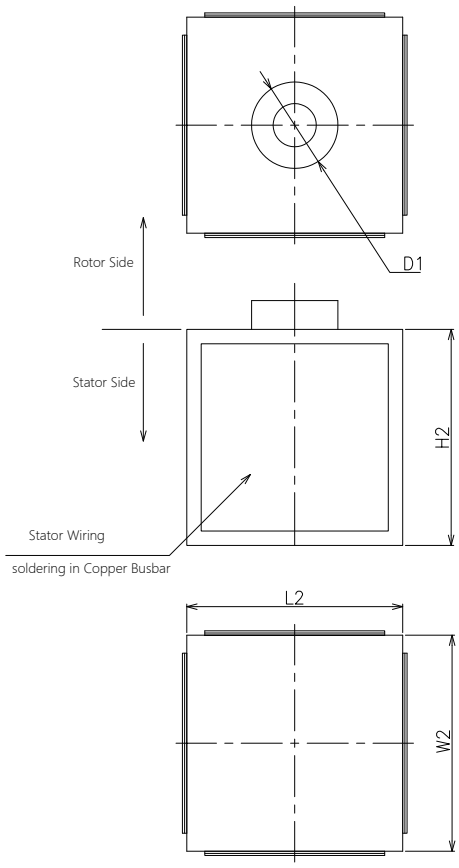

JINPAT Electronics

Customization options

Note: The following special requirements can be customized, JINPAT most of the basic accessories are standardized, modular, non-standard customization can also greatly reduce the cost and delivery time.

1、Customized rotor and stator outlet and outlet length

2、Due to structural limitations, can be customized in accordance with the speciƤed length or height or external diameter

3、Yasukawa, Panasonic, Siemens and other servo system signals, power lines, and encoder lines mixed slip ring

4、Mixed high-speed data transmission (including Ethernet, USB, RS232, RS485, Profbus, CanBUS, CANOPEN, DeviceNET, CANBUS, CANPUS). CANOPEN, DeviceNET, CC-LINK, ProƤNET, EtherCAT and other types of industrial lines).

5、Anti-shock, high temperature and other special environment customization

6、Can be mixed with pneumatic, hydraulic rotary joints integrated pneumatic-electrical-hydraulic slip ring

7、Military grade

8、Waterproof, underwater mode optional, IP65,IP68 optional

JINPAT Electronics